Name: _____

Problem	Points	Score
1a	10	
1b	10	
1c	10	
2a	10	
2b	10	
2c	10	
2d	10	
3a	10	
3b	10	
3c	10	
Total	**100**	

Notes:

1. The exam is closed book / closed notes. Students are allowed a copy sheet — only **one** side of **one** standard US-size (8.5” x 11”) sheet of paper — on which they can write relevant information such as theorems.

2. Please show ALL work. Incorrect answers with no supporting explanations or work will be given no partial credit.

3. If I can’t read or follow your solution, it is wrong, and no partial credit will be given — PLEASE BE NEAT!

4. Please indicate clearly your answer to every problem.

5. There is sufficient space after each problem to write your solution. In case you need extra paper please see the instructor.

6. Calculators of any kind are not allowed.

Problem No. 1:

A UV flip-flop performs the in the following fashion —

If UV = 00, the next state of the flip-flop is the same as the present state.
If UV = 01, the next state of the flip-flop is 0.
If UV = 10, the next state of the flip-flop is 1.
If UV = 11, the next state of the flip-flop is the complement of the present state.

Design a counter using 3 such UV flip-flops for the sequence

000, 010, 100, 110, 001, 111, 000, ...

by following the steps described below.

a) Complete the following table and find an equation to represent the next state Q^+ in terms of the inputs UV and the present state Q.

Solution:

Q	**Q^+**	**U**	**V**
0	0	0	X
0	1	1	X
1	0	X	1
1	1	X	0

$Q^+ =$ UQ’ + V’Q

As you may note, this is the same as the JK flip-flop with J = U and K = V.

b) Design a complete state table for the specified counter.

Solution:

ABC	$A^+B^+C^+$
000	010
001	111
010	100
011	XXX
100	110
101	XXX
110	001
111	000

c) Based on parts **a)** and **b)**, draw the appropriate K-maps and derive the equations for the flip-flop inputs. (Feel free to use any short-cut methods if applicable.)

Solution:

Since the UV flip-flop is the same as the JK flip-flop, we derive the input equations directly from the next-state maps.

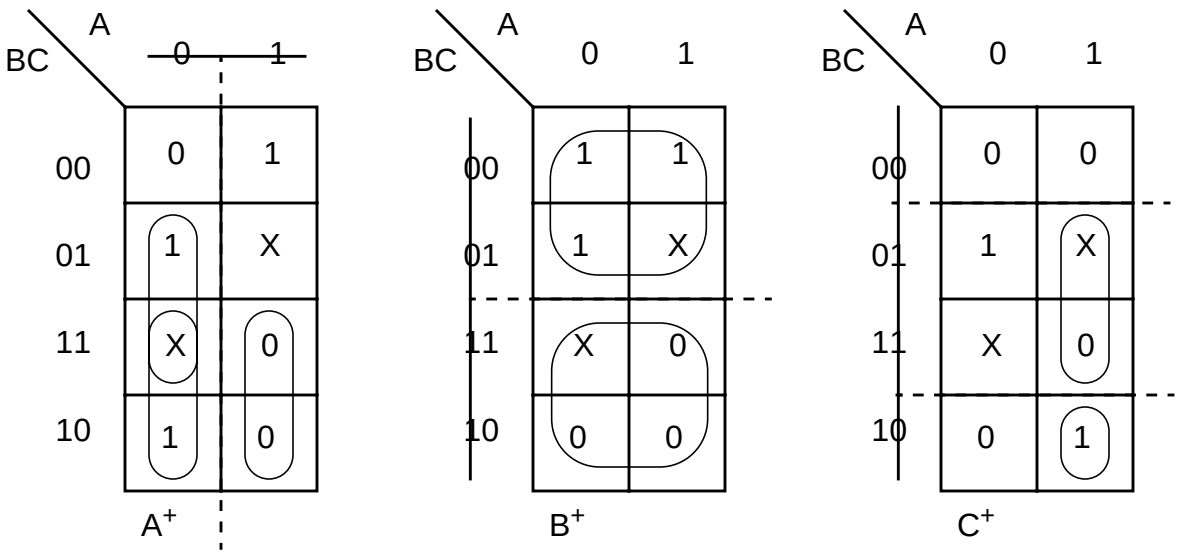

U_A = B + C V_A = B

U_B = 1 V_B = 1

U_C = AB V_C = A

Problem No. 2:

Analyze a sequential network that uses JK flip-flops A and B, and has one input X and one output Z as described below—

$$J_A = A + X \qquad K_A = B'X$$
$$J_B = AX' \qquad K_B = B + X$$
$$Z = A + B'$$

a) Derive the next-state equations for the two flip-flops in terms of the flip-flop outputs A,B and the input X. Is this network Moore or Mealy?

Solution:

The JK flip-flop state equation is $Q^+ = JQ' + K'Q$. Substituting the given equations, we get

$$\begin{aligned} A^+ &= J_A A' + K'_A A \\ &= (A + X)A' + (B'X)'A \\ &= A'X + (B + X')A \\ &= A'X + AB + AX' \end{aligned}$$

$$\begin{aligned} B^+ &= J_B B' + K'_B B \\ &= (AX')B' + (B + X)'B \\ &= AB'X' + (B'X)B \\ &= AB'X' \end{aligned}$$

As the output Z is only a function of the state (it depends only on A and B), this network is a **Moore** state machine.

b) Draw the next-state maps for the network based on part **a)**.

Solution:

AB \ X	0	1
00	0	1
01	0	1
11	1	1
10	1	0

A^+

AB \ X	0	1
00	0	0
01	0	0
11	0	0
10	1	0

B^+

c) Based on the state maps in part **b)** derive the corresponding next-state table for the network.

Solution:

AB	**A^+B^+**		**Z**
	X = 0	**X = 1**	
00	00	10	1
01	00	10	0
10	11	00	1
11	10	10	1

d) Trace the signals through the network for an input sequence of X = 01011 and complete the following timing diagram accordingly. Identify false outputs if there are any.

Solution:

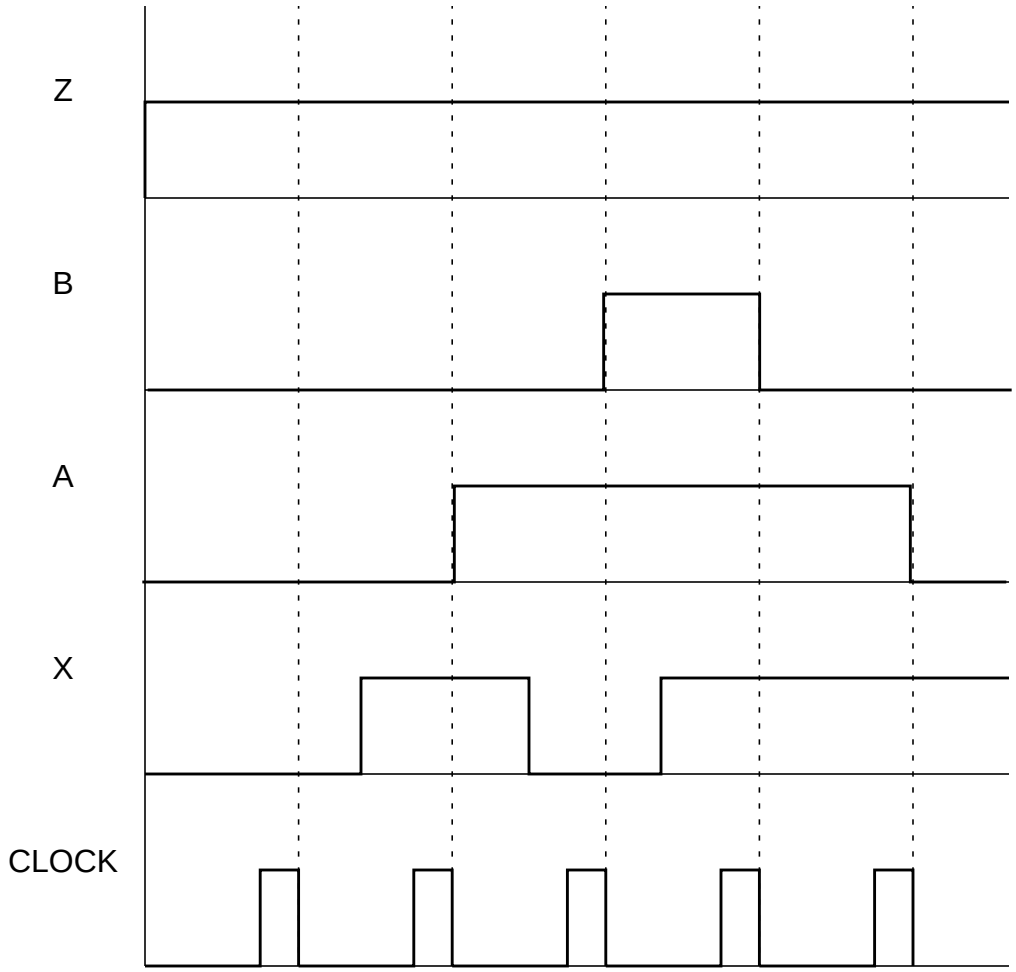

Problem No. 3:

A sequence detector has one input X and one output Z. The output Z becomes 1 if an input sequence of 110 or 101 is detected, otherwise it is 0. Design a **Mealy** sequential network to implement this sequence detector.

a) Derive and draw the Mealy state graph for this network, and draw the corresponding next-state table. (**Hint**: minimum 5 states.)

Solution:

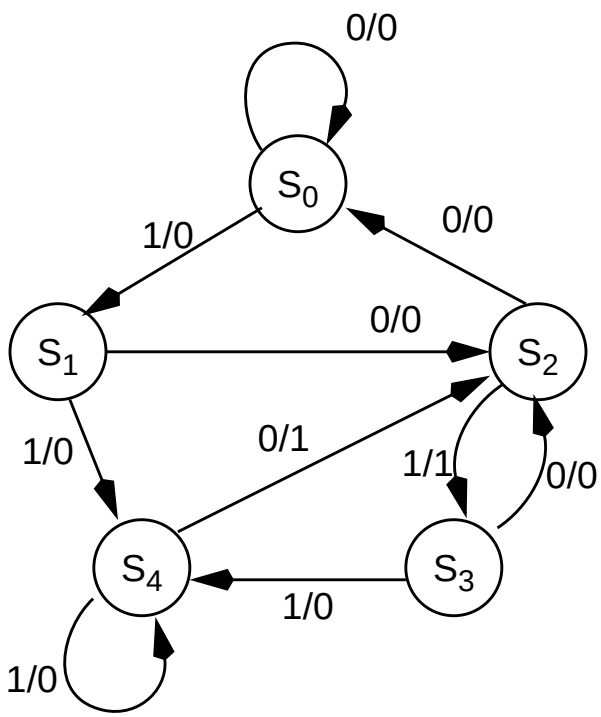

Since there are 5 states, we need 3 flip-flops to represent them. Let the states be denoted as —

S_0	000
S_1	001
S_2	010
S_3	011
S_4	100

Present state	Next state		Output Z	
	X = 0	X = 1	X = 0	X = 1
000	000	001	0	0
001	010	100	0	0
010	000	011	0	1
011	010	100	0	0
100	010	100	1	0

b) Draw the corresponding next-state maps for the network based on the state table in part **a)**.

Solution:

BC \ XA	00	01	11	10
00	0	0	1	0
01	0	X	X	1
11	0	X	X	1
10	0	X	X	0

A^+

BC \ XA	00	01	11	10
00	0	1	0	0
01	1	X	X	0
11	1	X	X	0
10	0	X	X	1

B^+

BC \ XA	00	01	11	10
00	0	0	0	1
01	0	X	X	0
11	0	X	X	0
10	0	X	X	1

C^+

BC \ XA	00	01	11	10
00	0	1	0	0
01	0	X	X	0
11	0	X	X	0
10	0	X	X	1

Z

c) Implement the sequence detector network using D flip-flops. Derive the flip-flop input equations and an equation for Z based on the state maps in part **b)**.

Solution:

From the state-maps and the K-map for Z, we see that

$$D_A = A^+ = XA + XC$$

$$D_B = B^+ = X'A + X'C + XBC'$$

$$D_C = C^+ = XA'C'$$

$$Z = X'A + XBC'$$